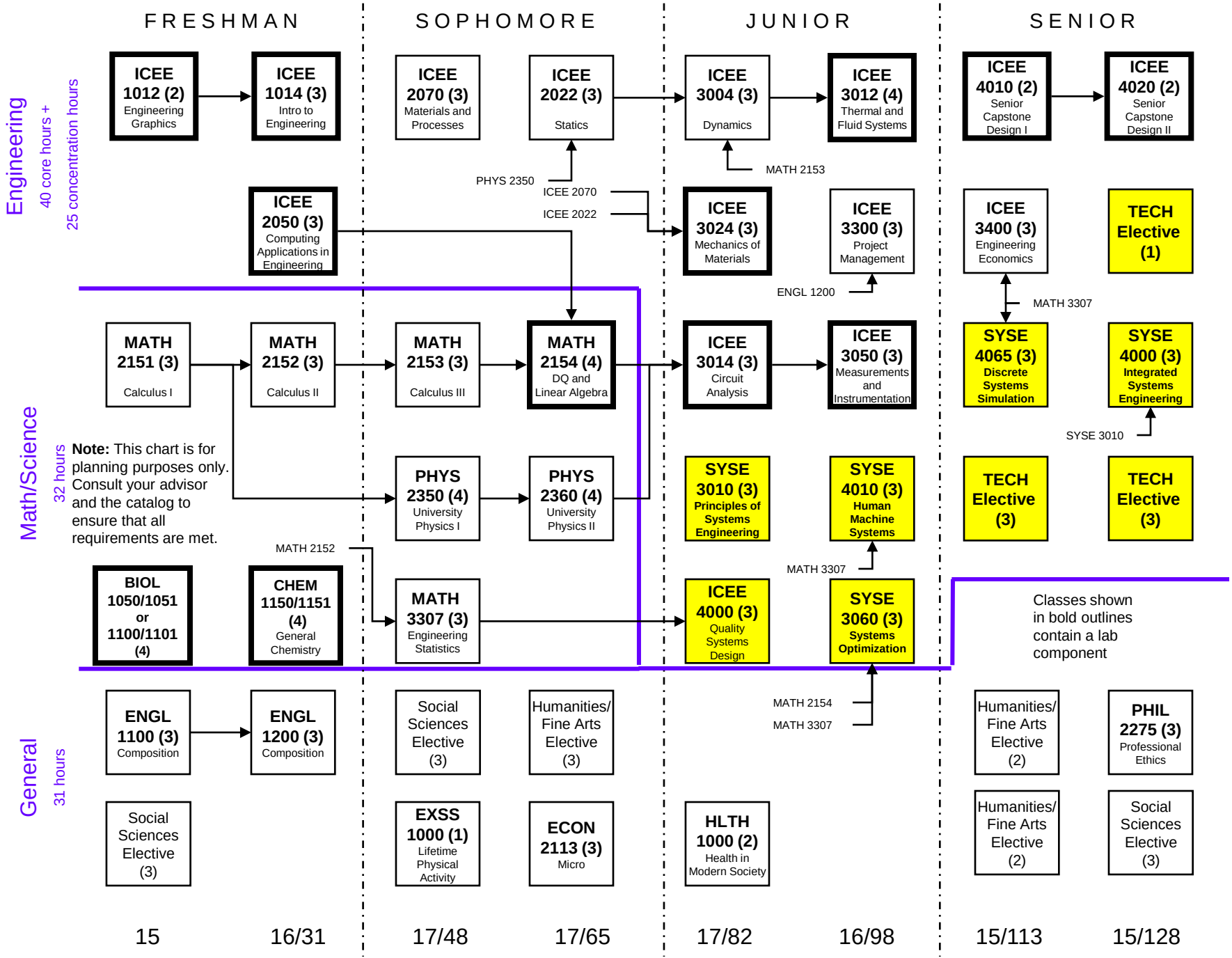BSE - SYSE Program – Entering Classes of 2008- 2009