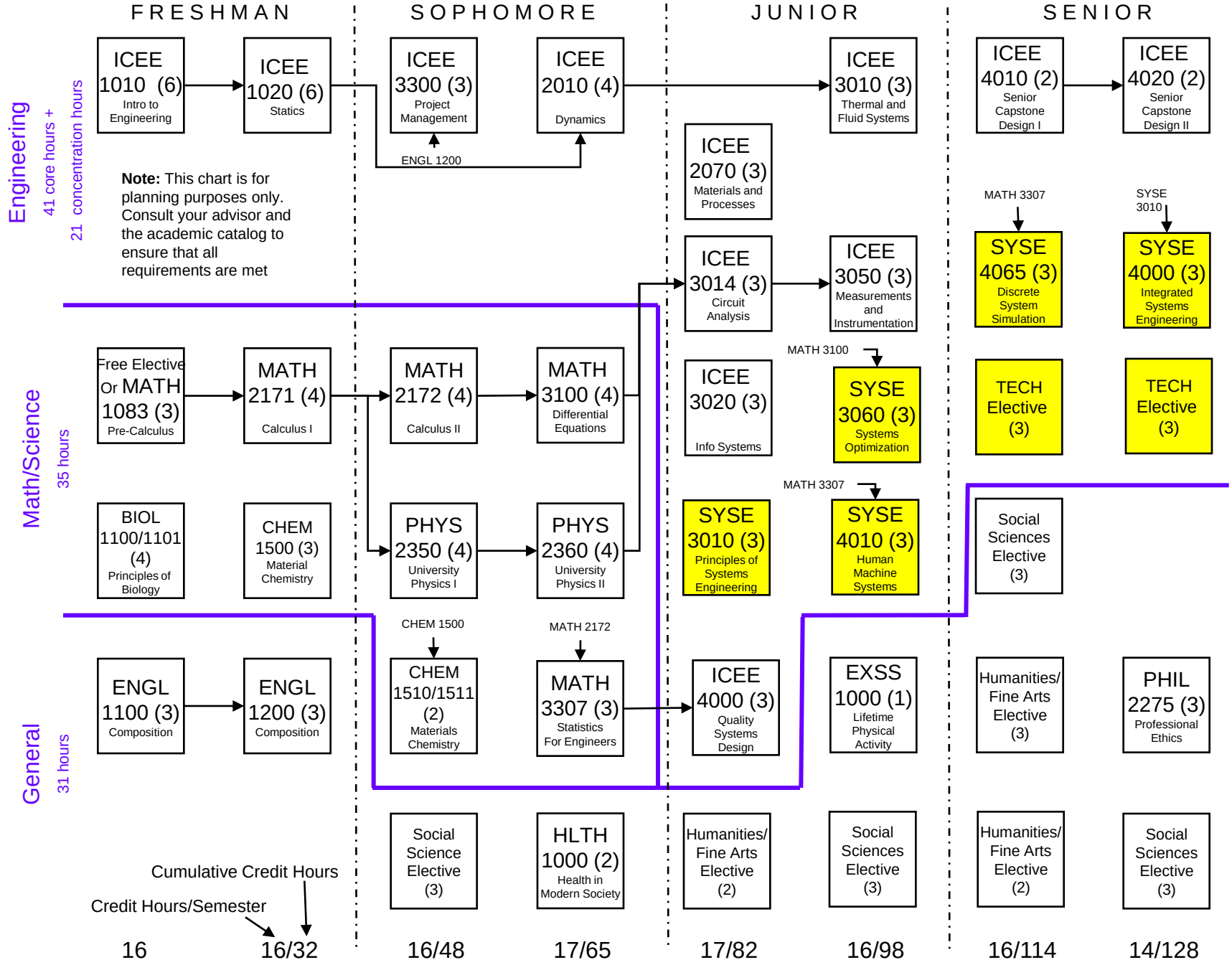BSE - SYSE Program – Entering Class of 2006