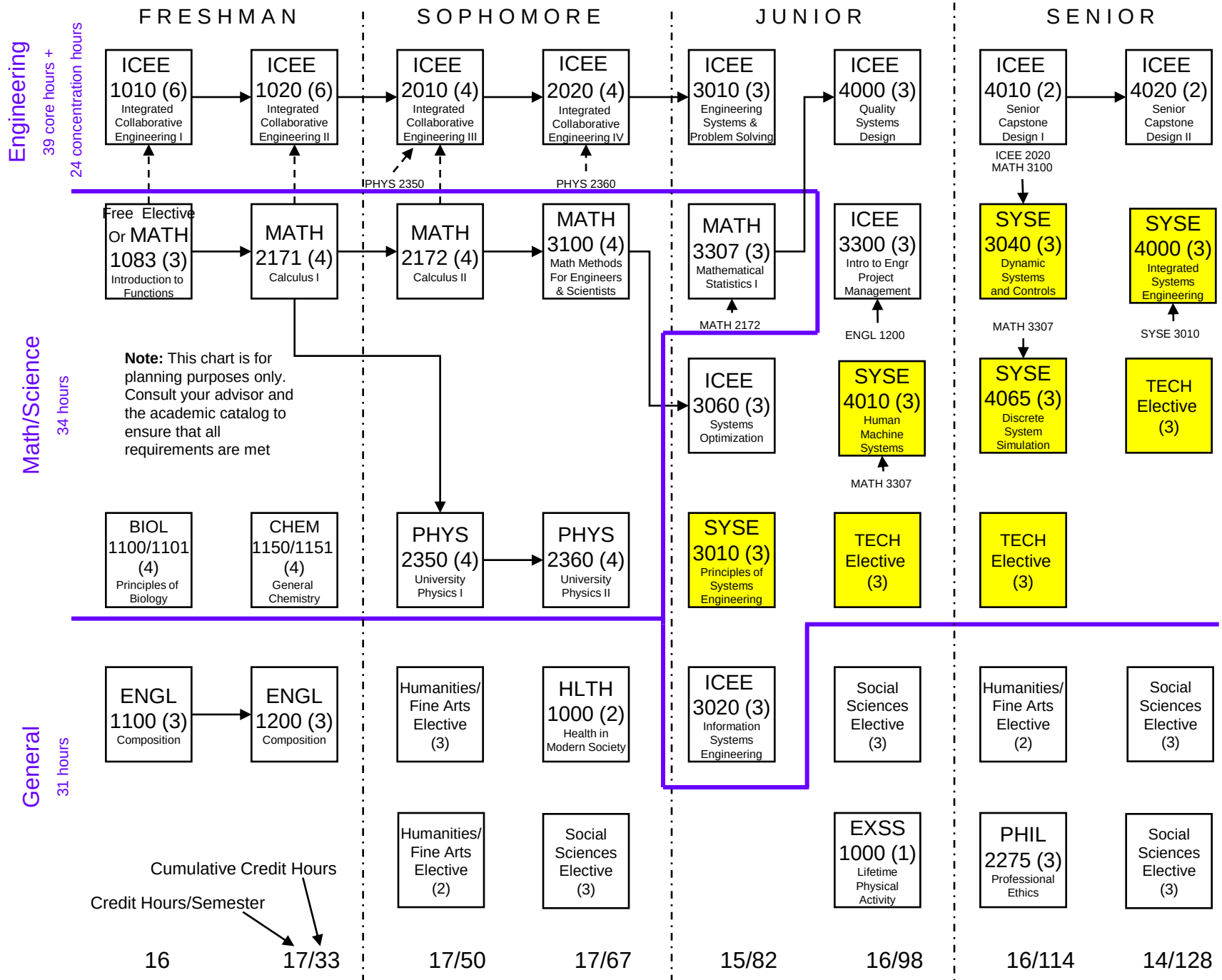BSE - SYSE Program – Entering Classes of 2005