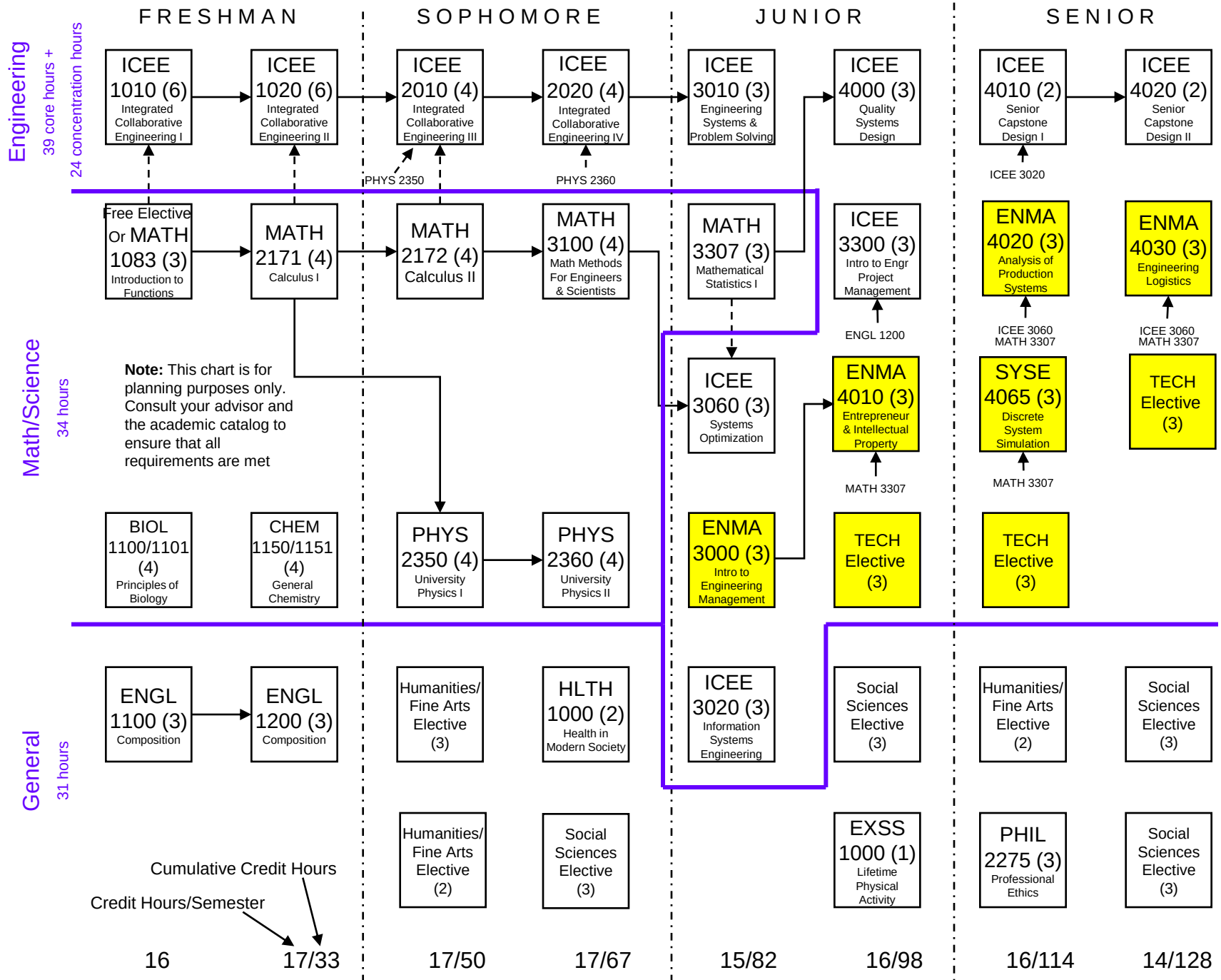BSE - ENMA Program – Entering Class of 2005